2-In-1 Stand
Assembly Instructions

step 1

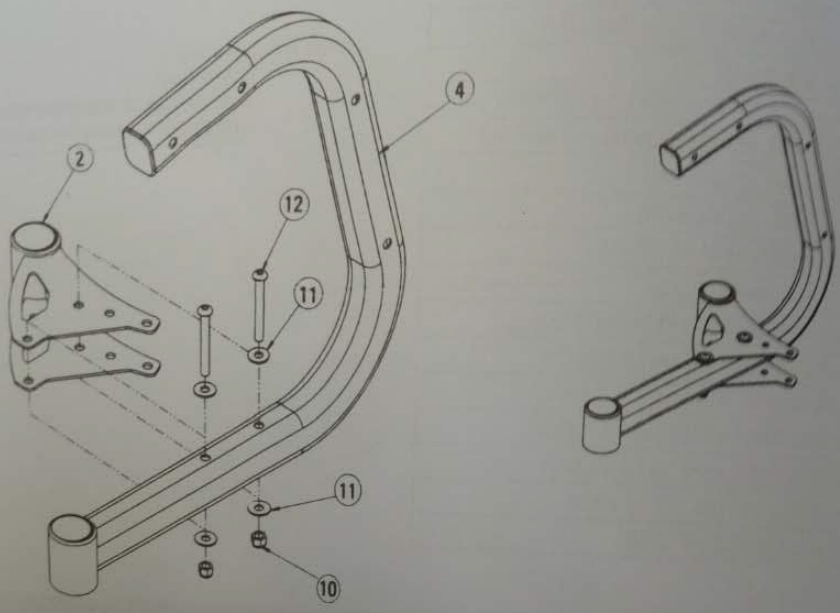

Figure 1

Parts:

- Stand Leg (#4)
- Rear Left Stabilizer (#2)

Hardware

	Qty
• 3" Screws (#12)	2
• Washers (#11)	4
• Nuts (#10)	2

Tools:

- Hex Key (7/32")

1-1 Attach the Rear Left Stabilizer (#2) to the Stand Leg (#4) using the hardware shown in **Figure 1**.

Note: Do not tighten hardware.

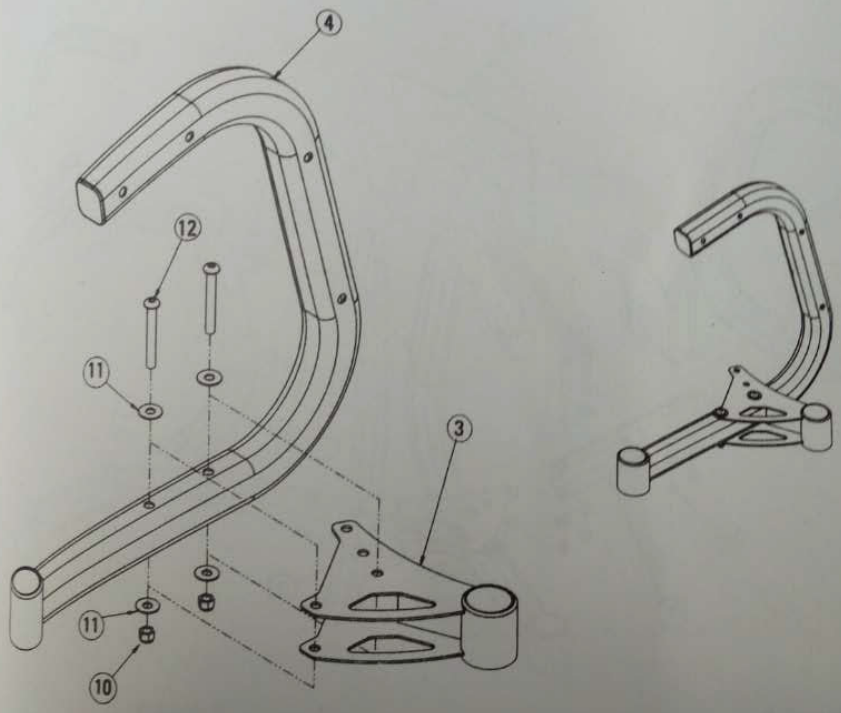

Figure 2

Parts:

- Stand Leg (#4)
- Rear Right Stabilizer (#3)

Hardware

	Qty
• 3" Screws (#12)	2
• Washers (#11)	4
• Nuts (#10)	2

Tools:

- Hex Key (7/32")

2-1 Attach the Rear Right Stabilizer (#3) to the Stand Leg (#4) using the hardware shown in **Figure 2**.

Note: Do not tighten hardware.

step 3

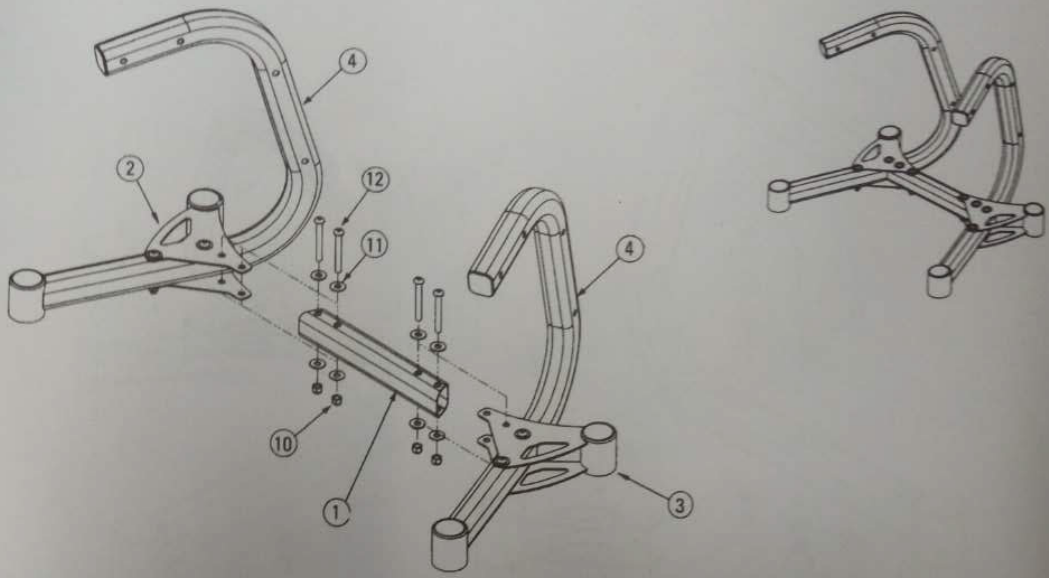

Figure 3

Parts:

- Cross Brace (#1)
- Left Stand Leg assembly from Step 1
- Right Stand Leg assembly from Step 2

Hardware	Qty
• 3" Screws (#12)	4
• Washers (#11)	8
• Nuts (#10)	4

Tools:

- Hex Key (7/32")

3-1 Attach the Bottom Cross Brace (#1) to the Rear Left Stabilizer (#2) and Rear Right Stabilizer (#3) using the hardware shown in **Figure 3**. Make sure that the narrower edge of the Cross Brace (#1) is closer to the Stand Leg (#4) uprights.

Note: Do not tighten hardware.

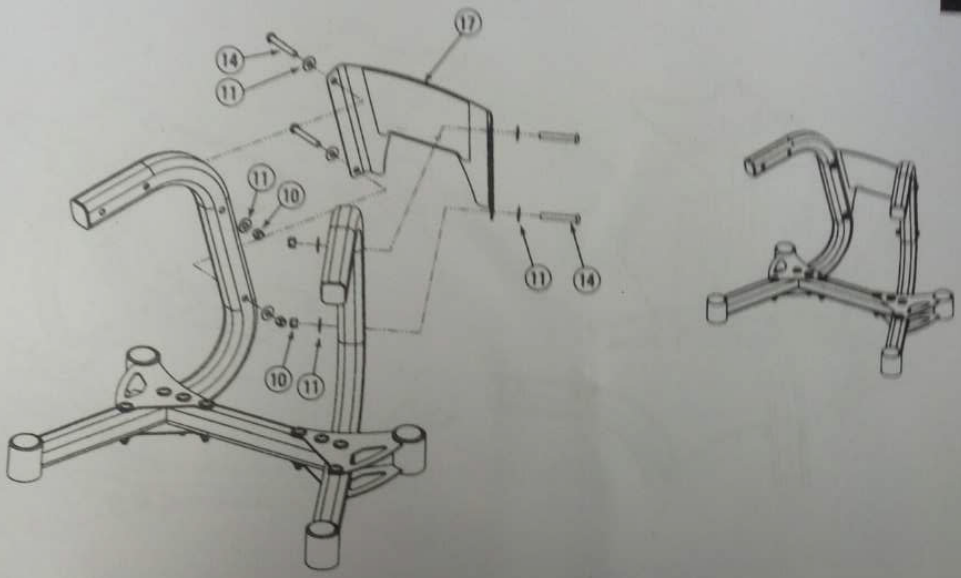

Figure 4

Parts:

- Stand Leg and Cross Brace assembly from Step 3
- Center Plate (#17)

Hardware	Qty
• 2.5" Screws (#14)	4
• Washers (#11)	8
• Nuts (#10)	4

Tools:

- Hex Key (7/32")
- Wrench/Socket (9/16") or Adjustable Wrench

4-1 Install the Center Plate (#17) to both Stand Legs (#4) using the hardware shown in **Figure 4**.

Note: Make sure that the Center Plate edges are on the outer sides of the legs, and that the logo on the Plate is right side up.

4-2 Tighten all hardware from Steps 1, 2 and 3 securely.

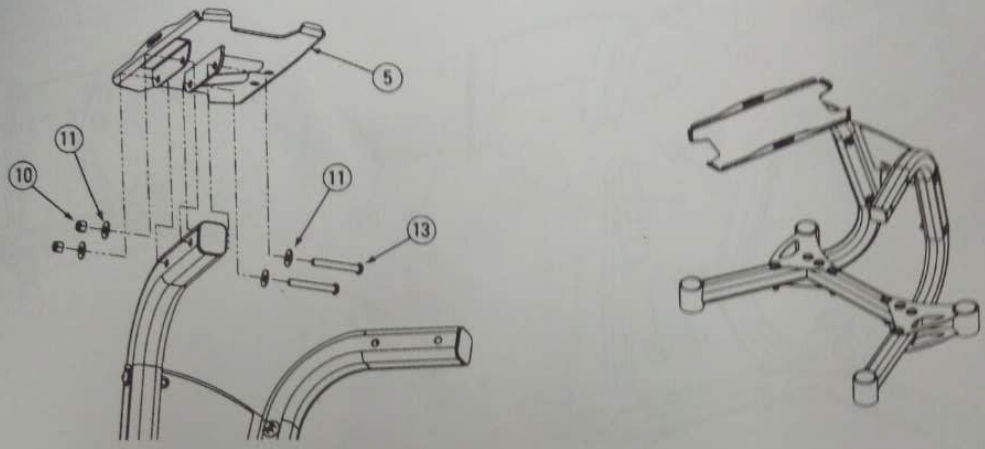

Figure 5

Parts:

- Stand base assembly from Step 4
- Left Dumbbell Platform (#5)

Hardware	Qty
• 2.75" Screws (#13)	2
• Washers (#11)	4
• Nuts (#10)	2

Tools:

- Hex Key (7/32")
- Wrench/Socket (9/16") or Adjustable Wrench

5-1 Secure the Left Dumbbell Platform (#5) to left Stand Leg (#4) using the hardware shown in **Figure 5.**

Note: Make sure the screw holes in the Platform are toward the center of the stand.

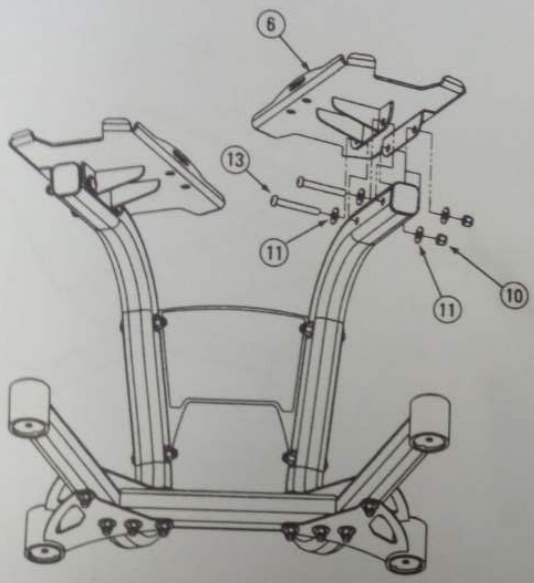

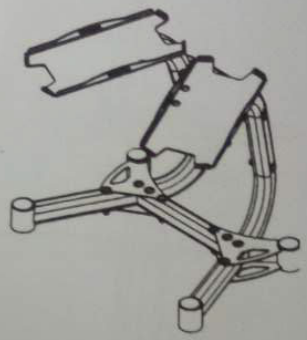

Figure 6

Parts:

- Stand base assembly from Step 5
- Right Dumbbell Platform (#6)

Hardware	Qty
• 2.75" Screws (#13)	2
• Washers (#11)	4
• Nuts (#10)	2

Tools:

- Hex Key (7/32")
- Wrench/Socket (9/16") or Adjustable Wrench

6-1 Secure the Right Dumbbell Platform (#6) to right Stand Leg (#4) using the hardware shown in **Figure 6**.

Note: Make sure the screw holes in the Platform are toward the center of the stand.

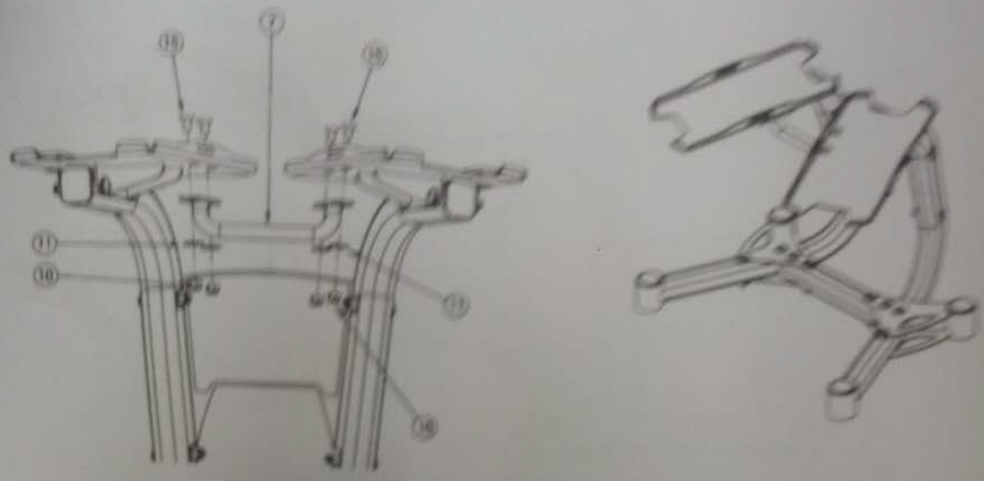

Figure 7

Parts:

- Stand assembly from Step 6
- Towel Bar (#7)

Hardware	Qty
• 1" Screws (#15)	4
• Washers (#11)	4
• Nuts (#10)	4

Tools:

- Hex Key (7/32")
- Wrench/Socket (9/16") or Adjustable Wrench

7-1 Attach the Towel Bar (#7) to the Left Dumbbell Platform (#5) and the Right Dumbbell Platform (#6) using hardware shown in **Figure 7**. Hand tighten screws in a cross pattern, to ensure even fit.

7-2 Tighten all screws securely.

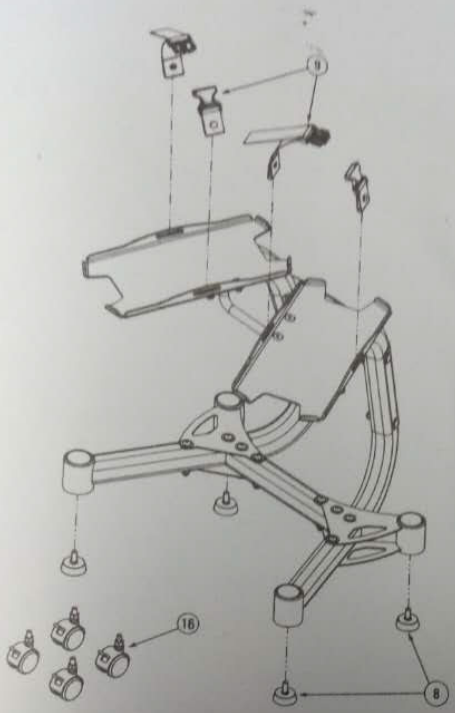

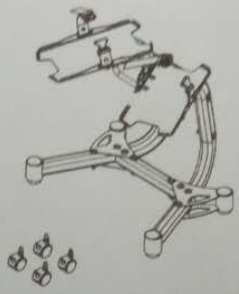

Figure 8

Parts:

- Stand assembly from Step 7
- Foot Pegs (#8) or Caster Wheels (#16)
- Hold Down Straps (#9)

8-1 Attach either Foot Pegs (#8) or Caster Wheels (#15) to the Rear Left Stabilizer (#2), the Rear Right Stabilizer (#3), and both Stand Legs (#4). See **Figure 8**.

8-2 Attach the Hold Down Straps (#9) to the Left Dumbbell Platform (#5) and the Right Dumbbell Platform (#6) as shown in **Figure 8**.

Complete Stand Component Diagram

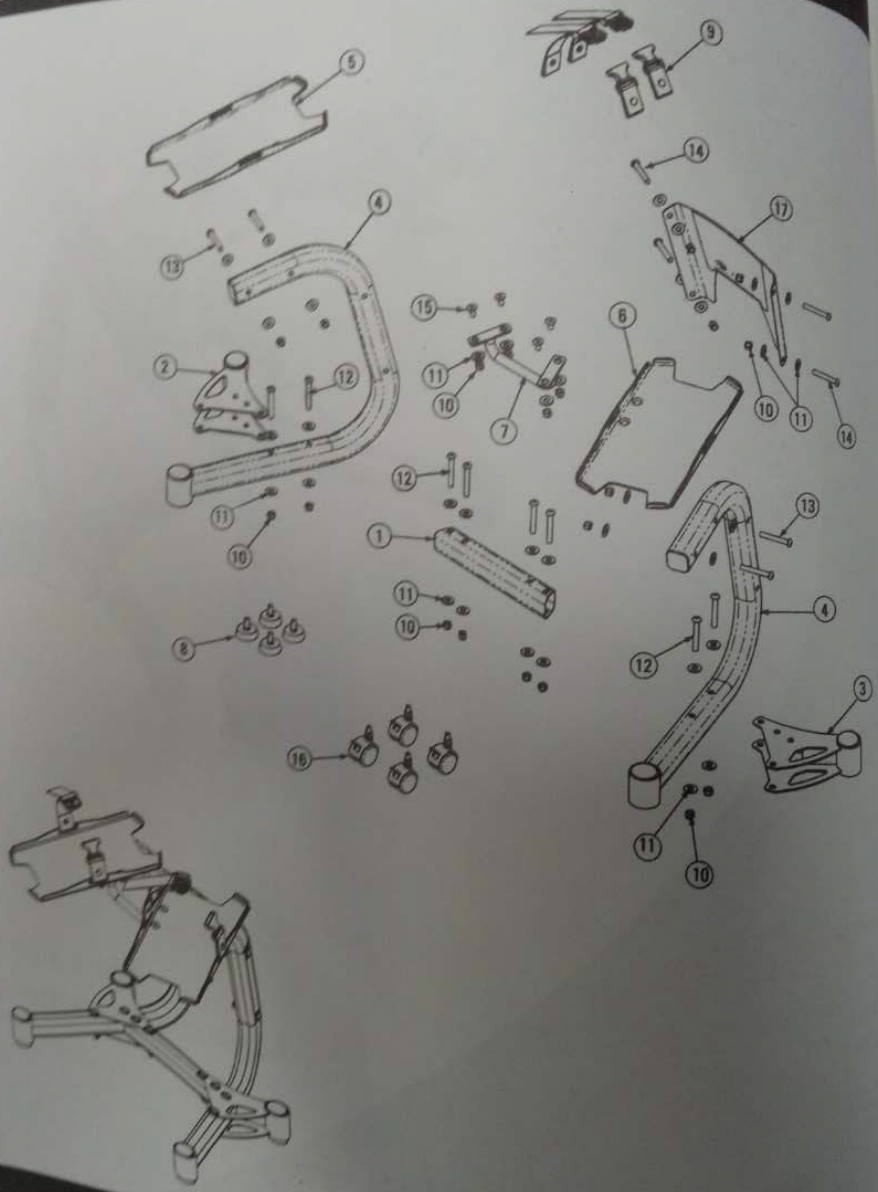

#	Qty.
1	1
2	1
3	1
4	2
5	1
6	
7	
8	
9	
10	
11	
12	
13	
14	
15	
16	
17	

Parts

#	Qty.	Description
1	1	TUBE, BOTTOM CROSS BRACE
2	1	ASSEMBLY, REAR LEFT STABILIZER
3	1	ASSEMBLY, REAR RIGHT STABILIZER
4	2	ASSY, STAND LEG
5	1	WELDMENT, LEFT DUMBBELL PLATFORM
6	1	WELDMENT, RIGHT DUMBBELL PLATFORM
7	1	WELDMENT, TOWEL BAR
8	1	FOOT PEGS, SET OF FOUR
9	1	HOLD DOWN STRAPS, 2F 2M
10	20	NUT-NL 0.375-16 G2-BlkZ
11	36	WASHER-FLAT 0.375 REGULAR BLKZ
12	8	SCREW-BHCS 0.375-16x3.0 G2-BlkO
13	4	SCREW-BHCS 0.375-16x2.75 G2-BlkO
14	4	SCREW-BHCS 0.375-16x2.5 G2-BlkO
15	4	SCREW-FHCS 0.375-16x1.0 G2-BlkO
16	1	WHEELS, CASTER SET OF FOUR
17	1	PLATE, CENTER W/ LOGO

Tools Required

7/32" Allen Wrench (included)

You will also need:

9/16" Socket
9/16" Wrench or Adjustable Wrench
Utility knife or scissors to cut nylon ties

Hardware

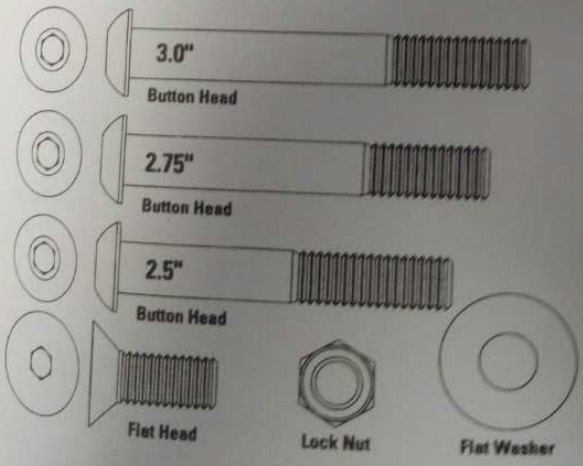

	Qty
Hardware Card A:	
2.75" Screw, Button Head	4
2.5" Screw, Button Head	4
1.0" Screw, Flat Head	4
Nut, Lock	12
Washer, Flat	20
Hardware Card B:	
3.0" Screw, Button Head	8
Nut, Lock	8
Washer, Flat	16
7/32" Allen Wrench	