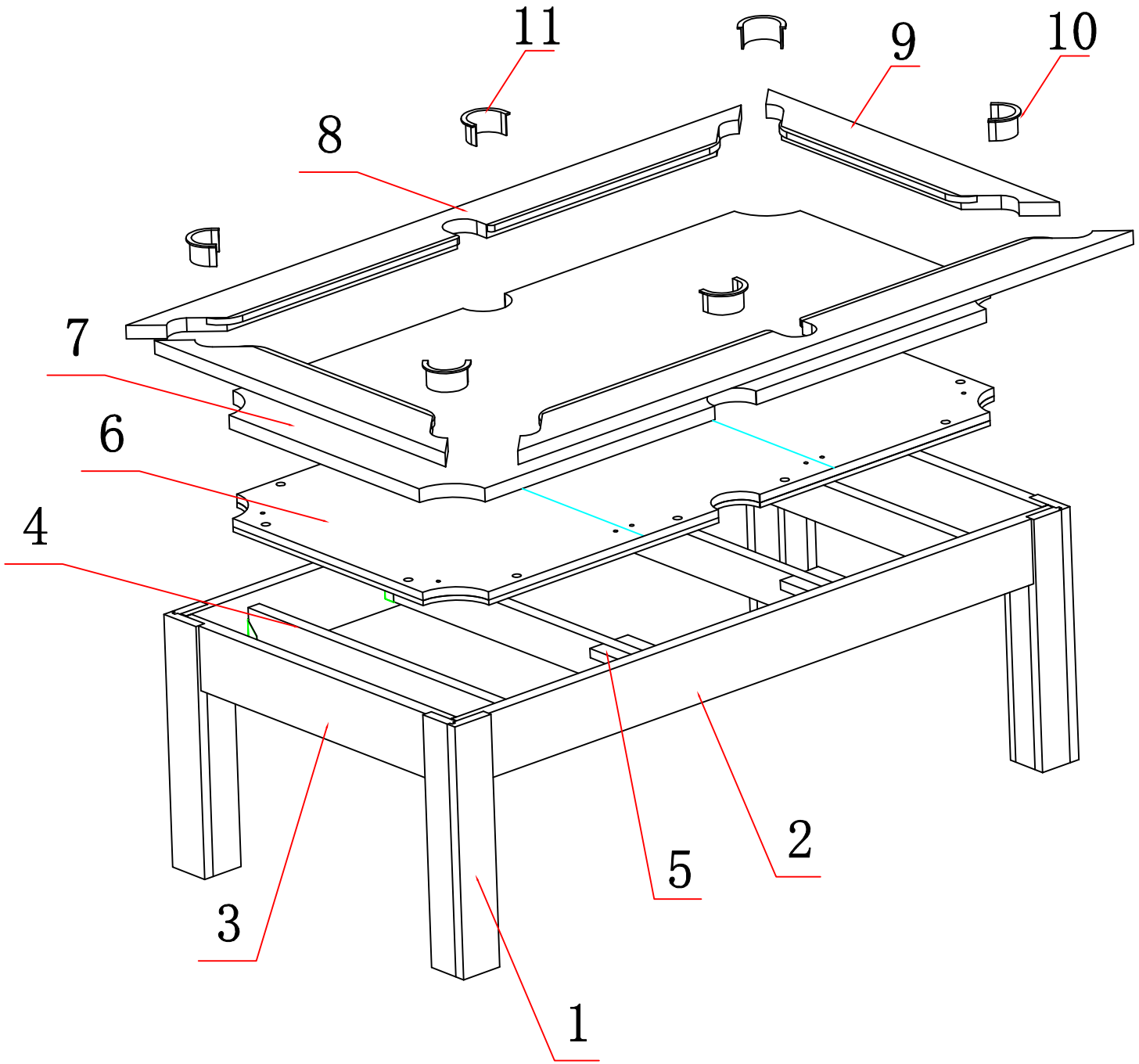
11
9
10
8
7
6
4
3
5
2
1

#	DESCTRI-PTION	DRAWING	QTY
1	Leg	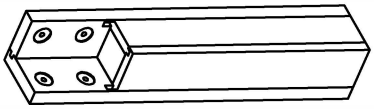	4
2	Long Panel		2
3	Short Panel	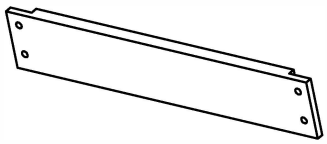	2
4	Beam	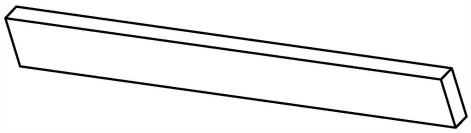	4
5	Wood Block	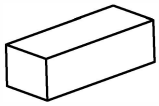	4
6	Three-piece Slate	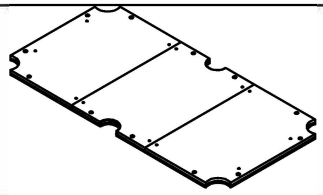	1 Set
7	Felt	2295*1225	1 Piece
8	Long Side Board		2
9	Short Side Board	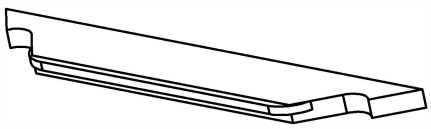	2
10	Corner Pocket	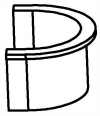	4

#	DESCTRI-PTION	DRAWING	QTY
11	Side Pocket	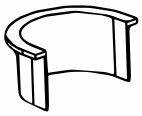	2
12	10*45 Hex Screw	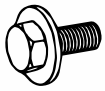	28 Sets
13	10*100 Double-head Screw	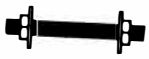	4 Sets
14	Steel Bracket		8
15	10*25 Hex Screw		8
16	5*50 Self Tapping Screw		24
17	3. 5*25 Self Tapping Screw		28
18			
19			
20			

1

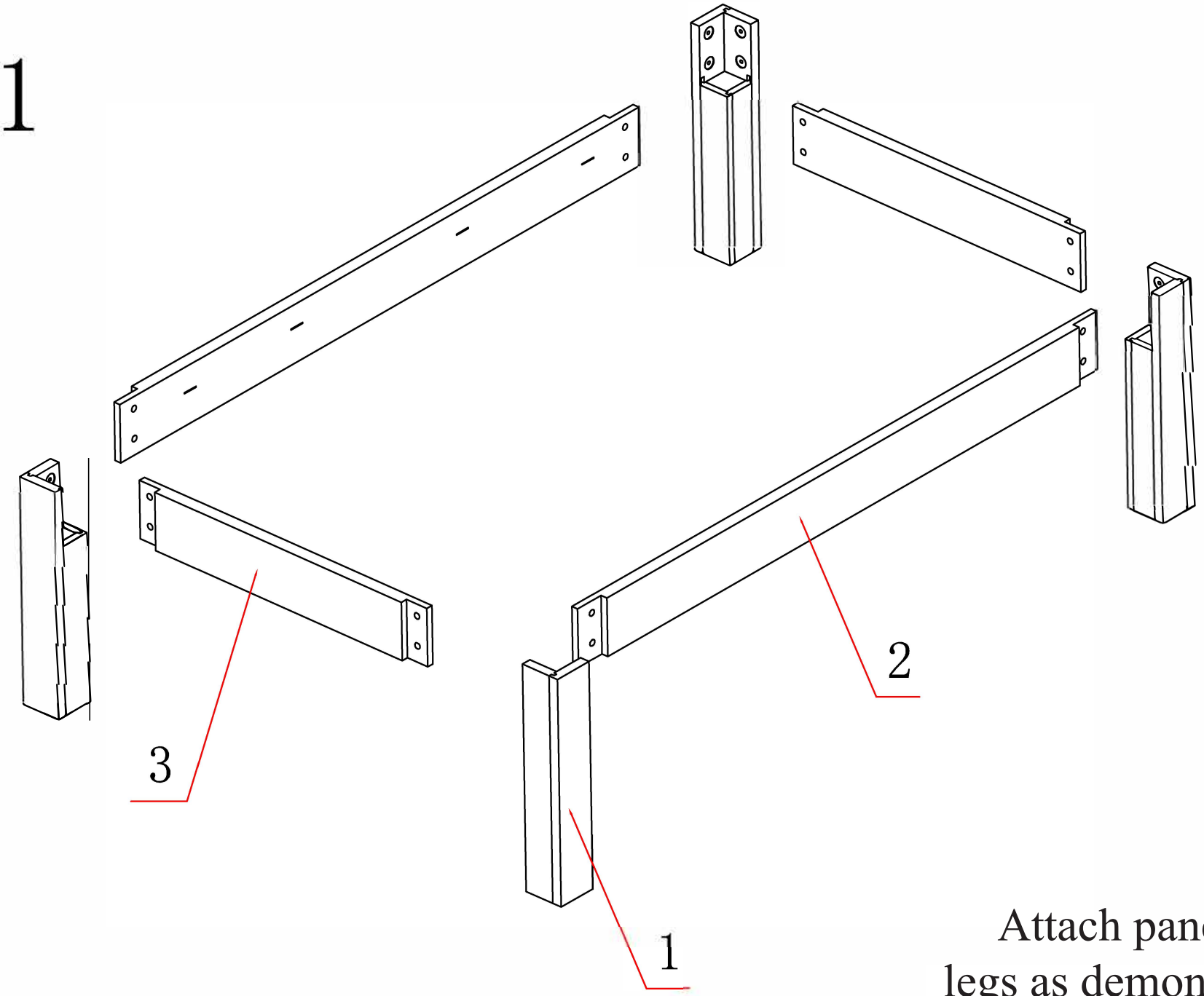

Attach panels and
legs as demonstrated.

2

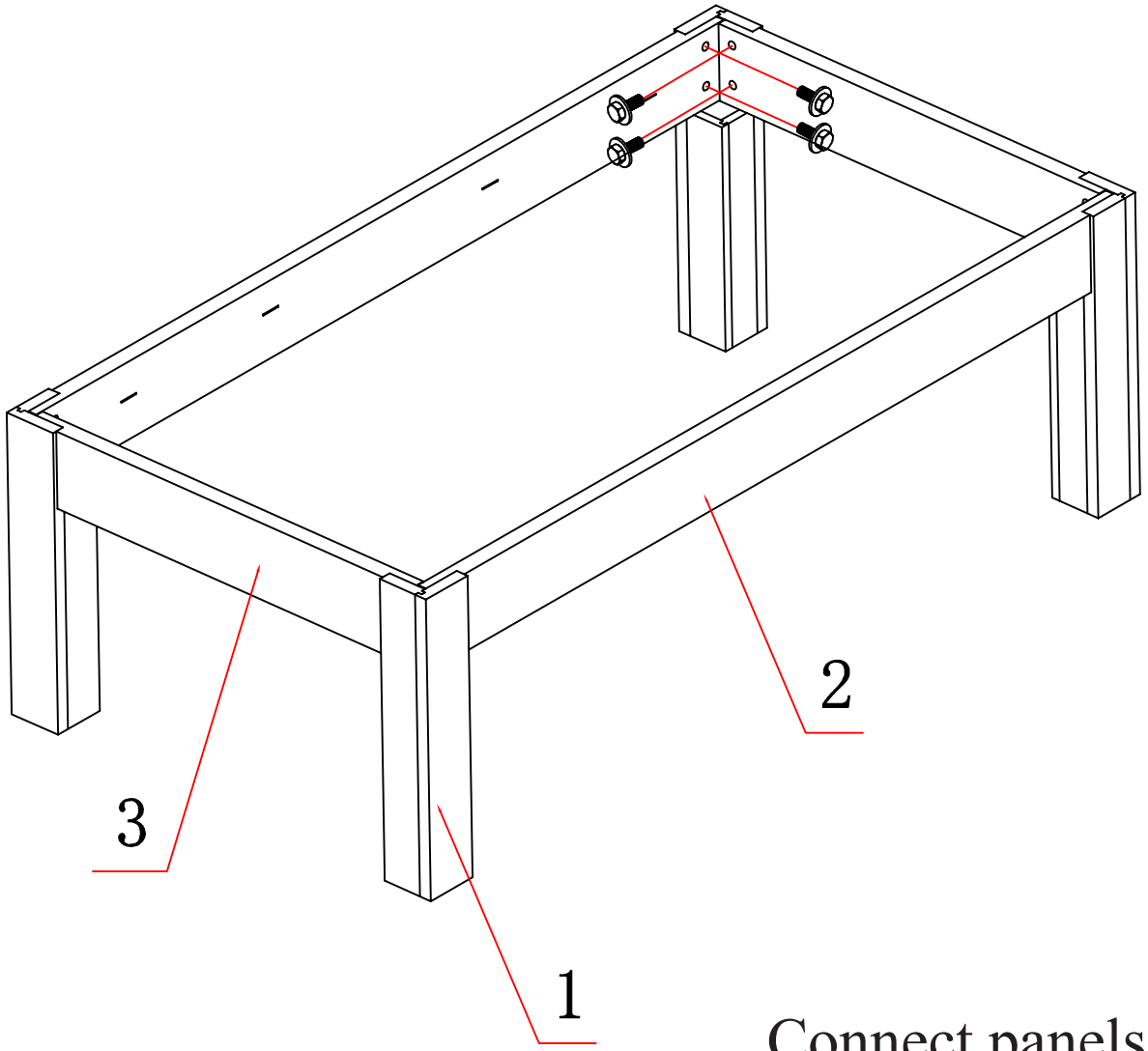

10*45

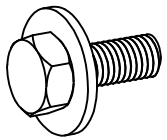

*16

Connect panels and legs firmly
by tightening screws.

3

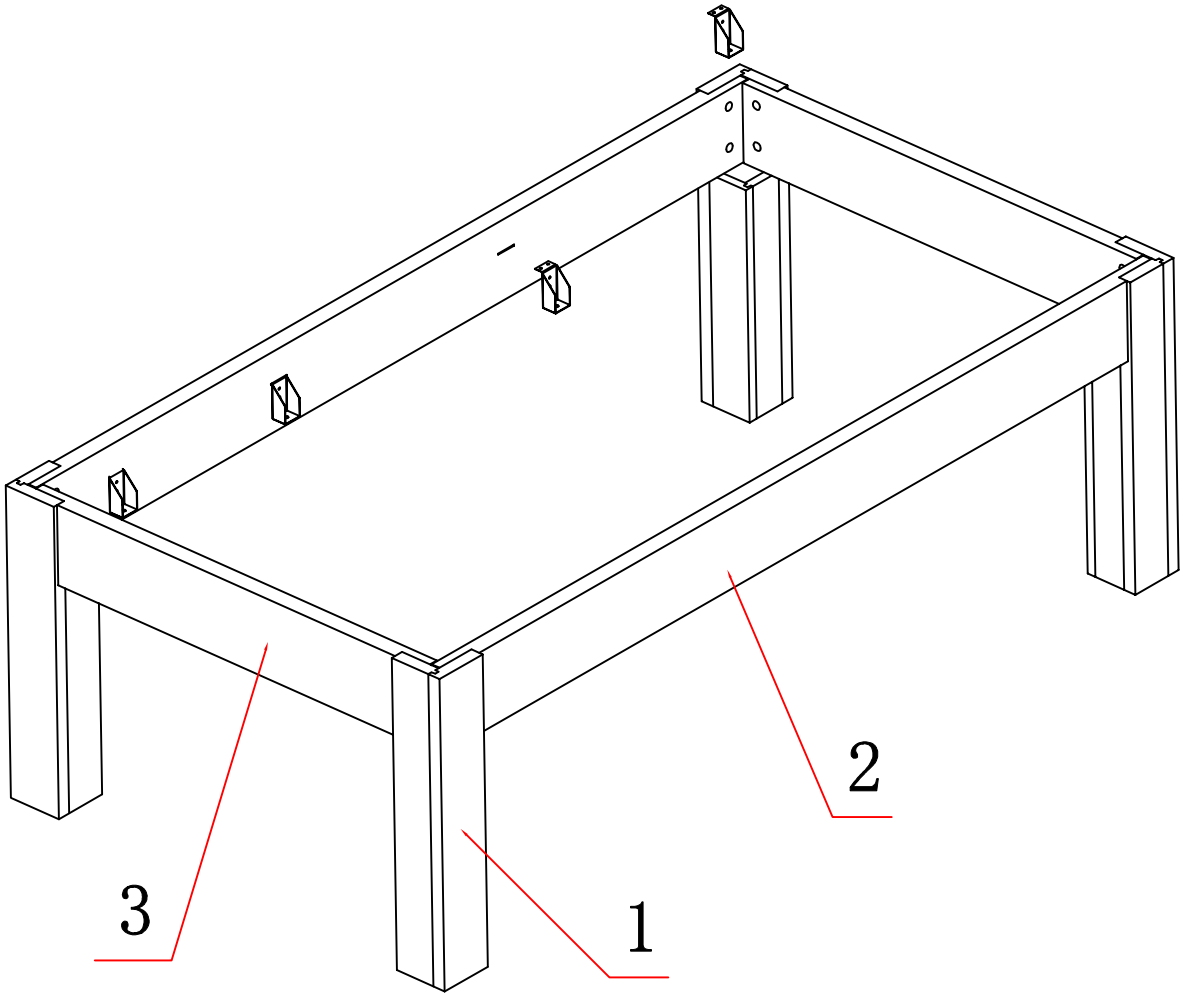

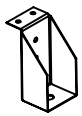

*8

10*25

*8

3. 5*25

*16

Attach steel brackets firmly.

4

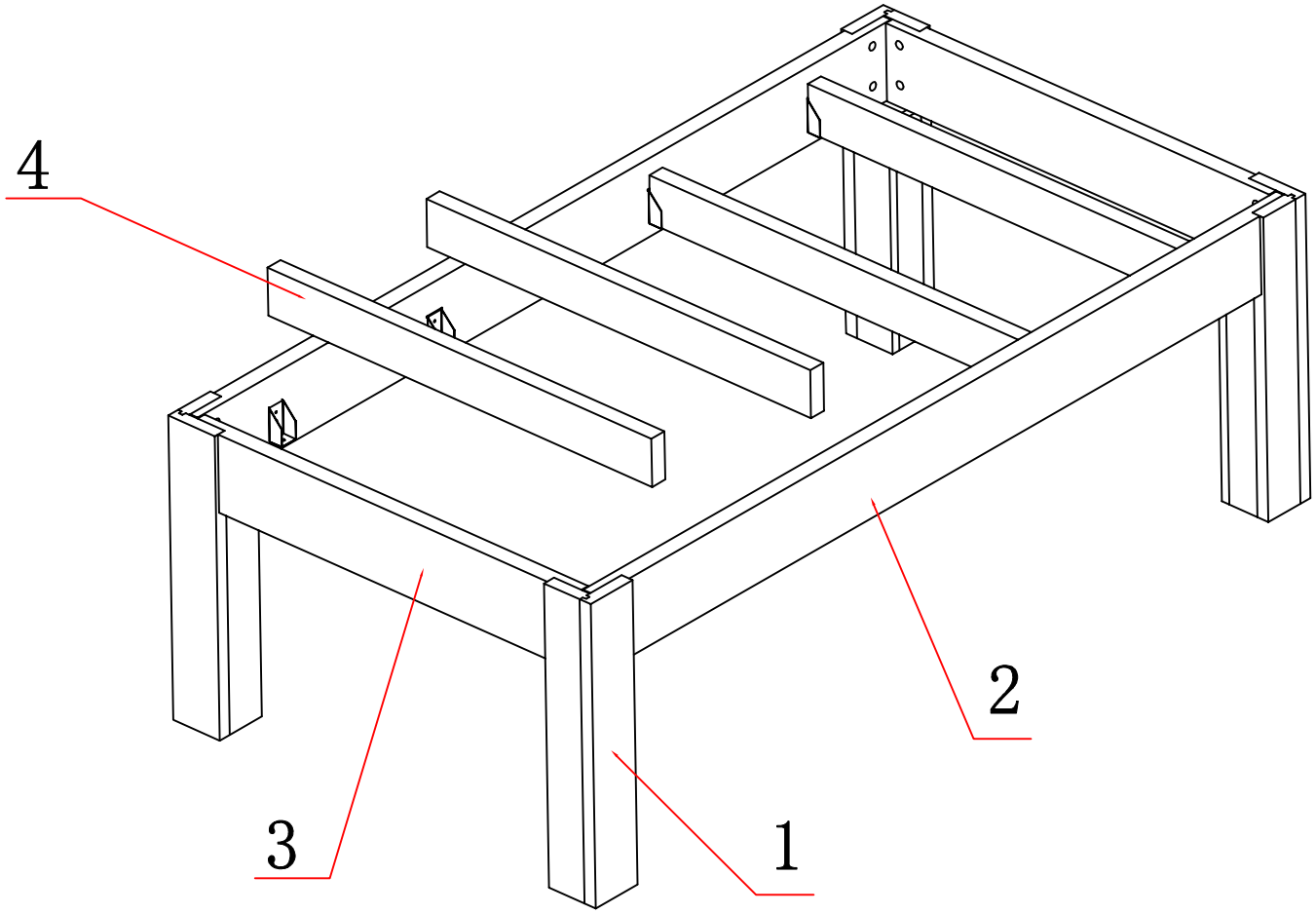

Place the beams.

5

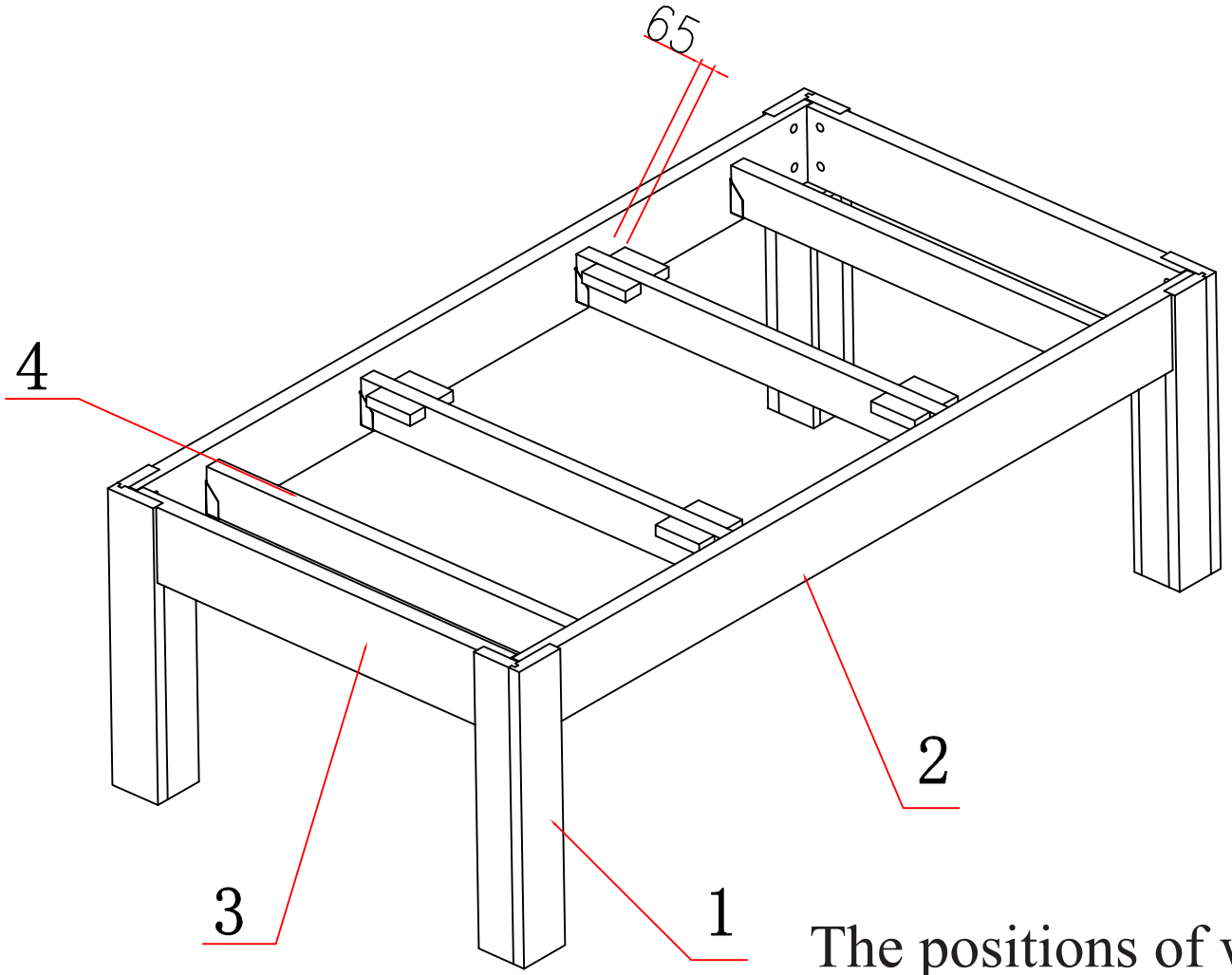

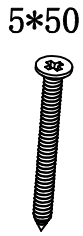

*16

The positions of wood blocks should be settled according to the position of the middle slate which will be centred on top of beams soon.

6

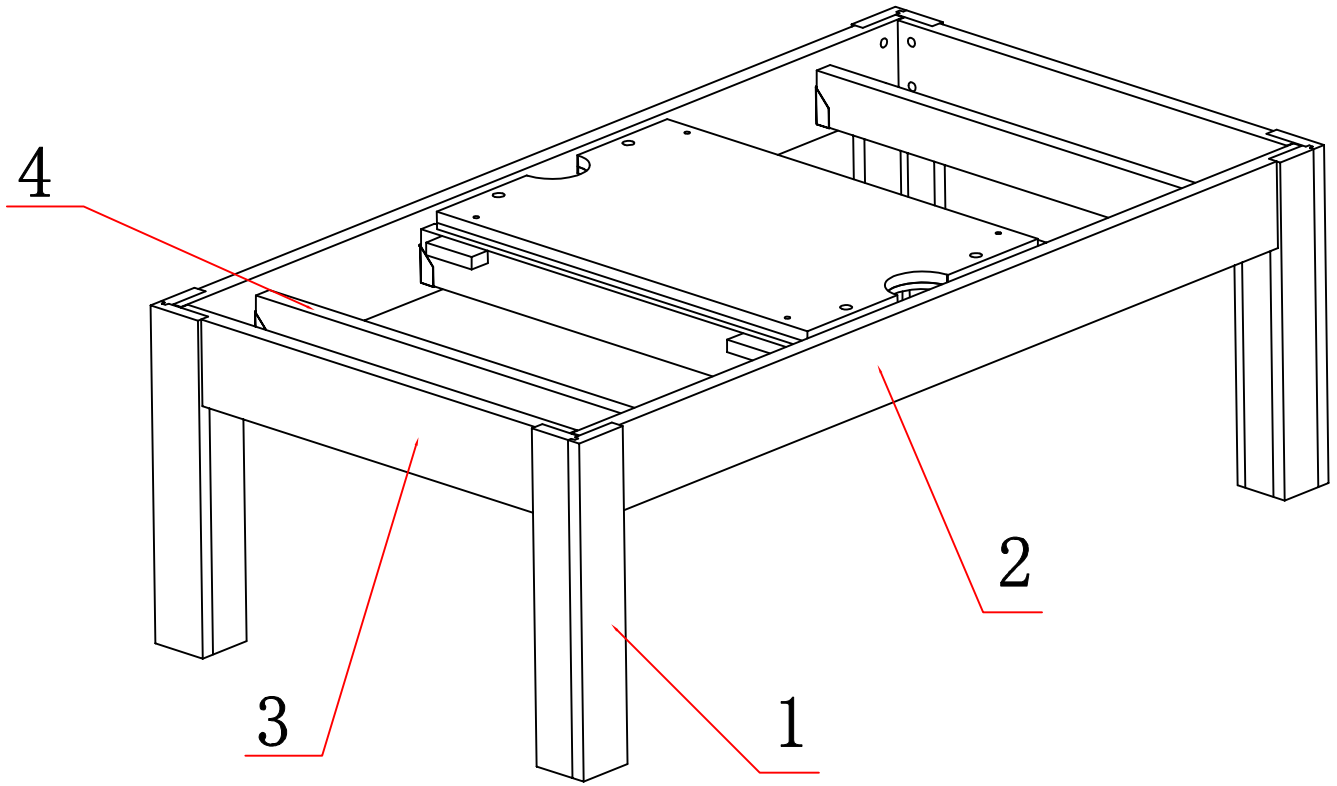

Place well the three-piece slate.

7

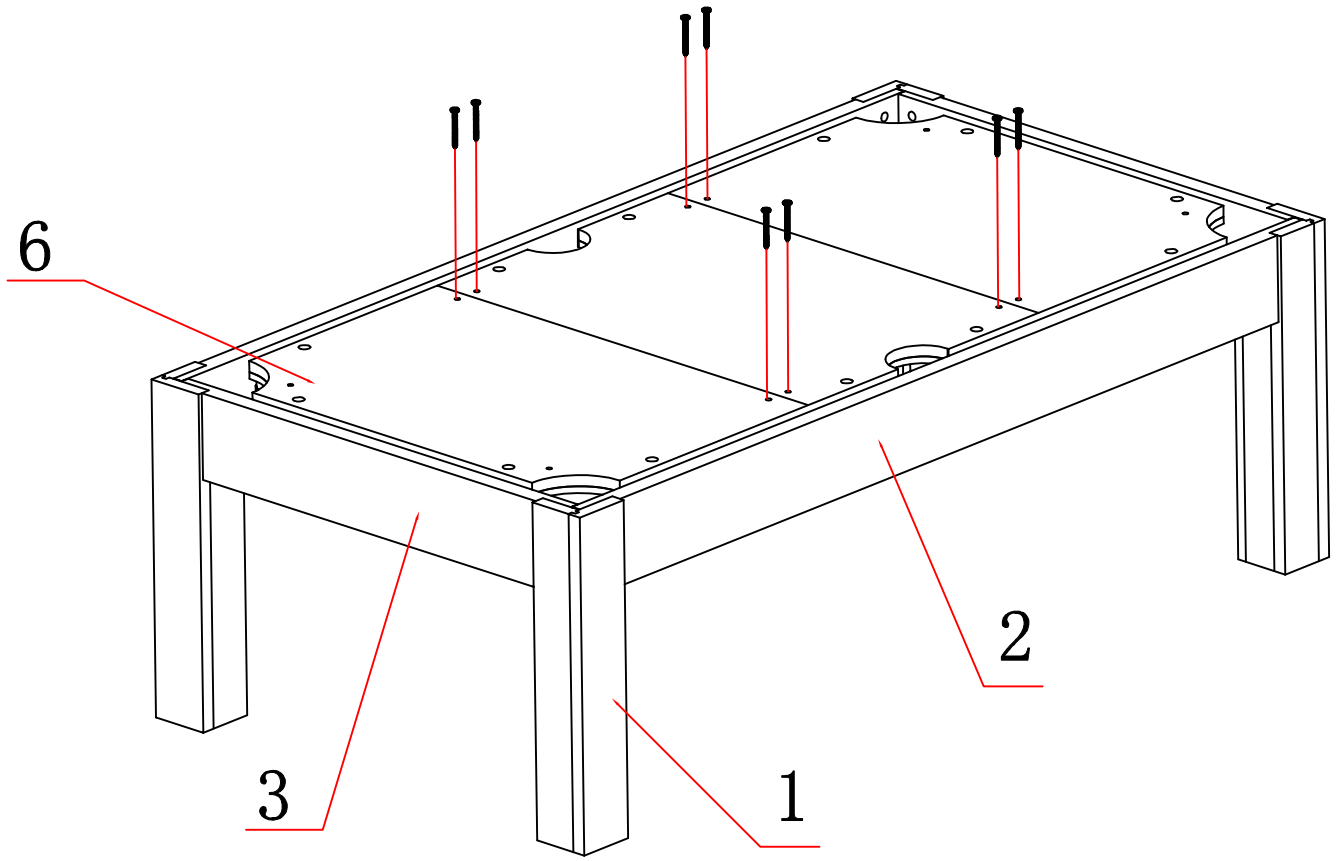

Firmly fix the three-piece slate.

8

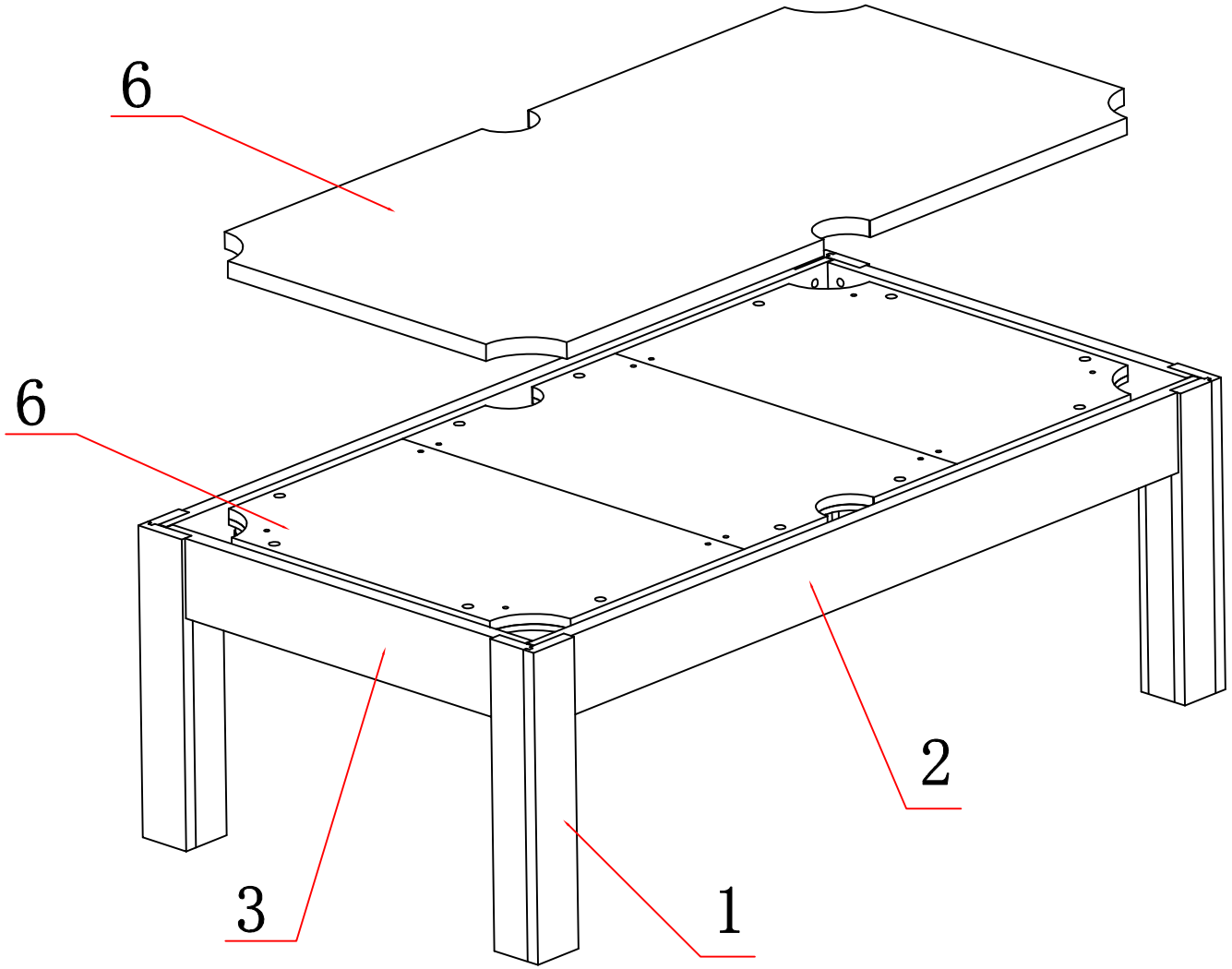

Wrap the slate with felt and tighten them with glue and screw.

9

Cut a cross on felt at the position where is for screw

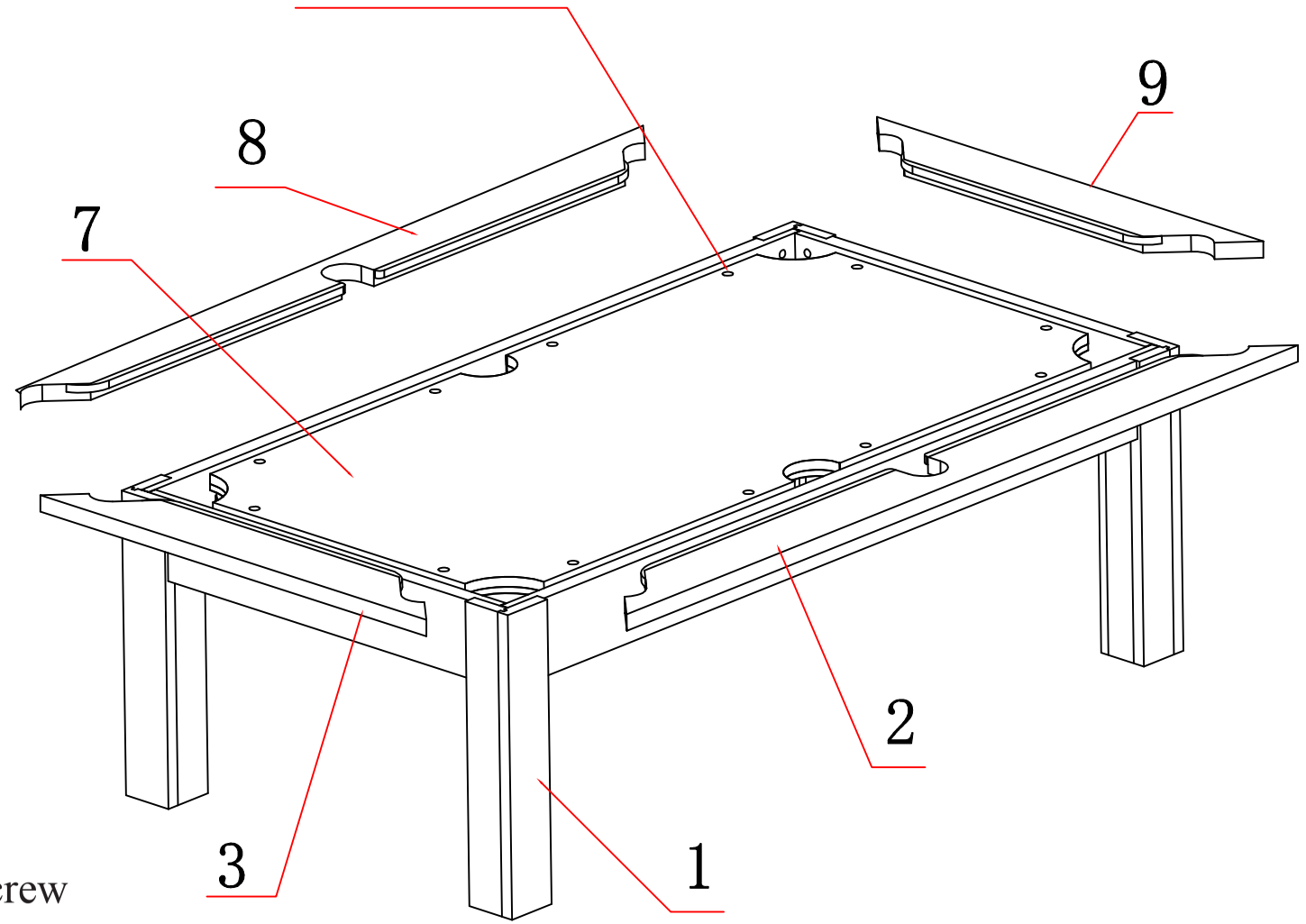

10*100
Double-head screw

*4

Attach side boards. (Tighten screws)

10

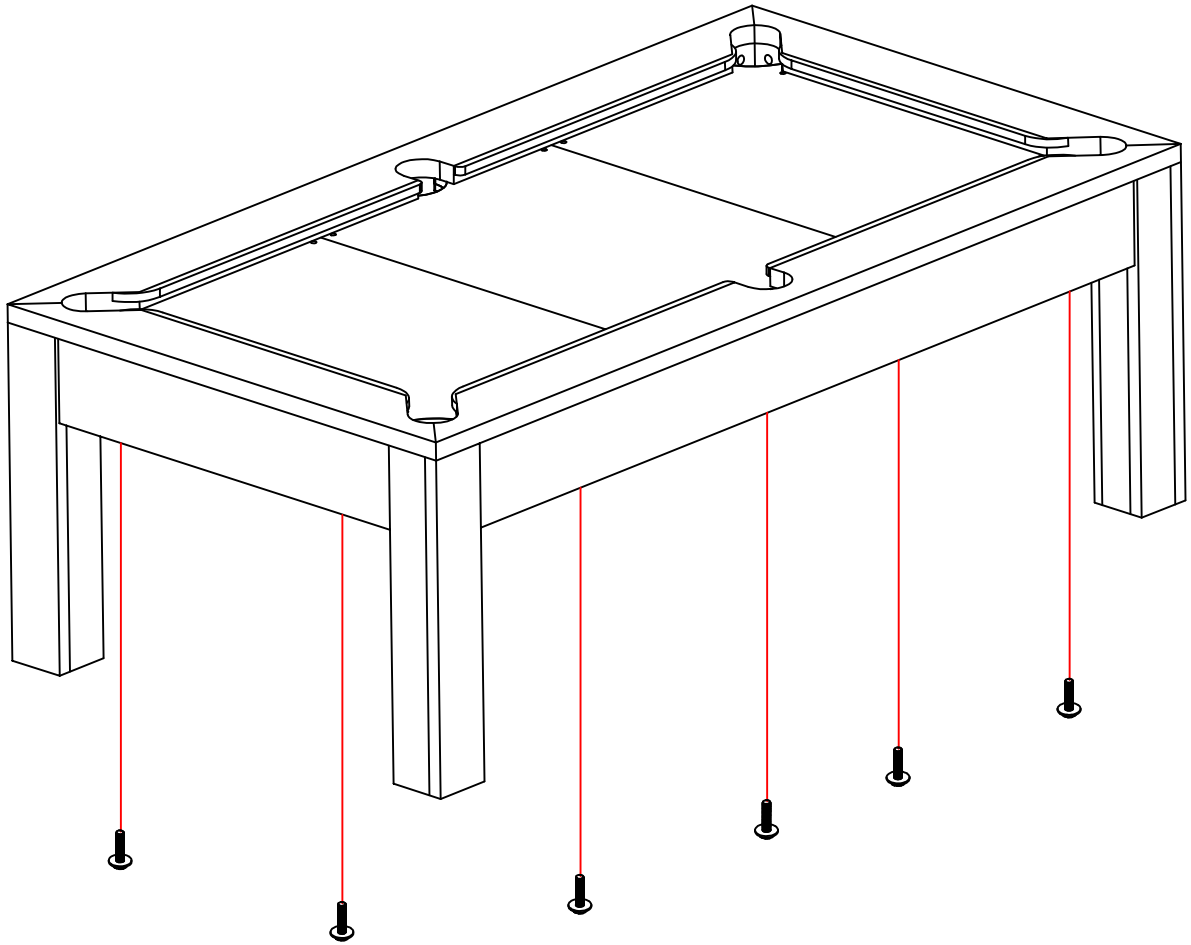

10*45

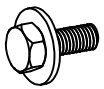

*12

Firmly screw the panels

11

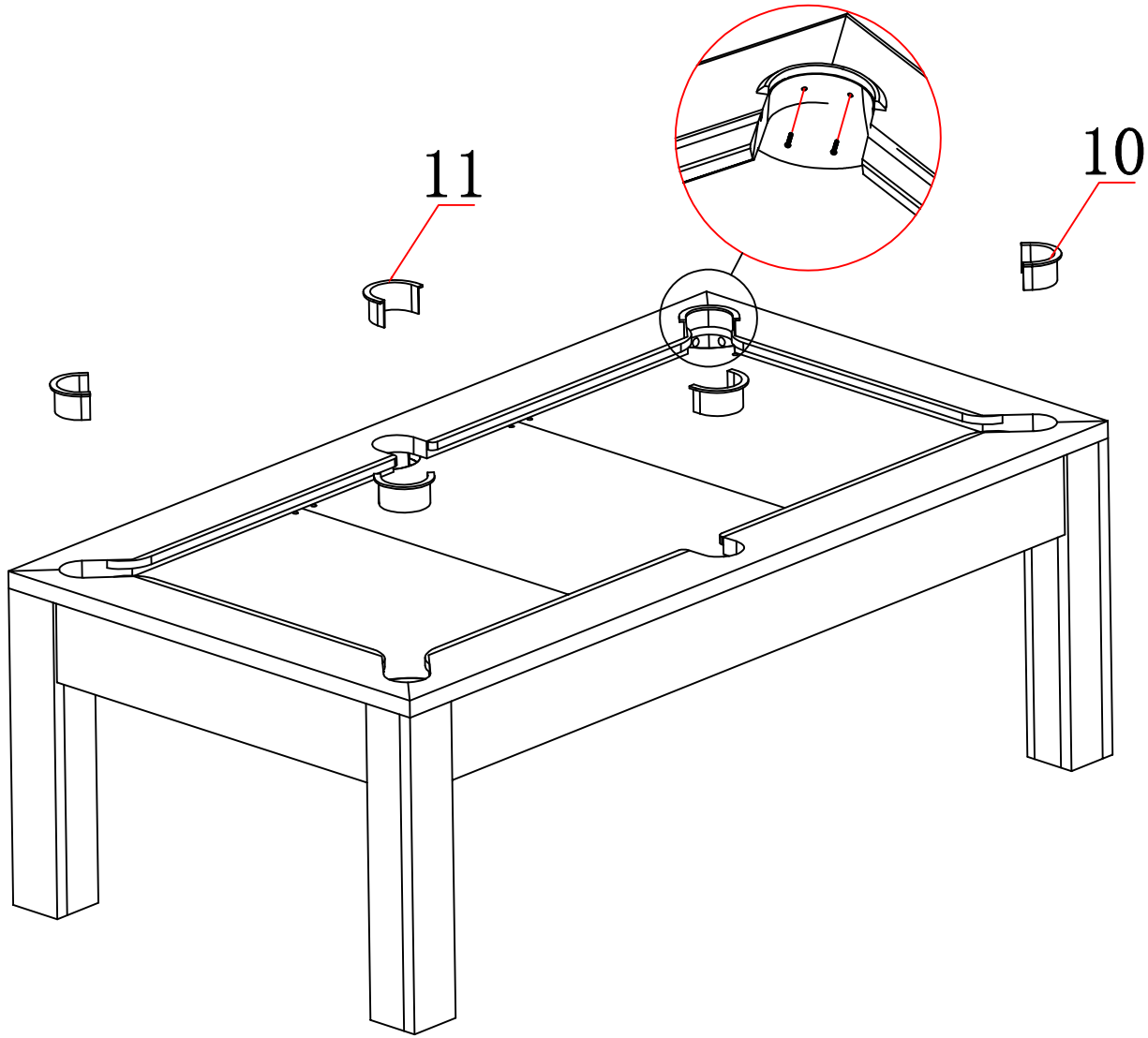

3. 5*25

*12

Attach all pockets firmly
by using screws.

12

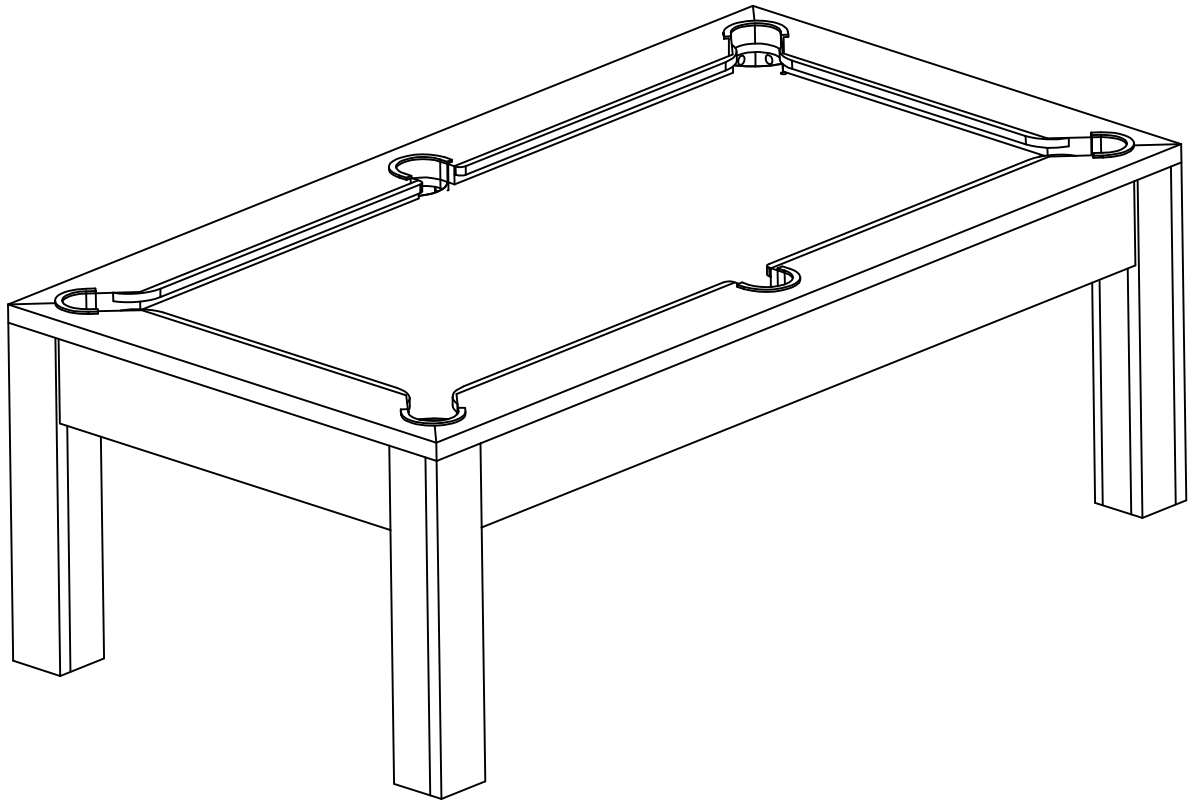

Congratulations! All done!