A7 PLUS

Treadmill

Instruction Manual

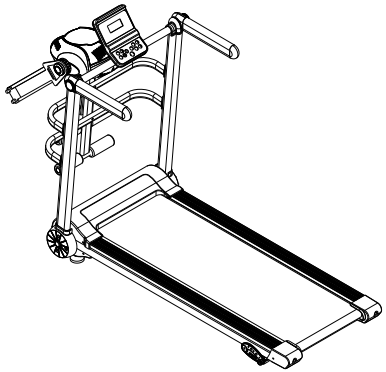

Please read this manual carefully before using the product and keep it.

1. Catalogue

Number	Content
1	Catalog
2	Safety instructions
3	Package specifications
4	Assembly specifications
5	Electric control instructions
6	Maintenance instructions
7	Failures and trouble shooting
8	Warranty terms
9	Exercise guidelines
10	Warm exercise

Thanks choose this home use treadmill. Our products will improve your health, the more familiar with your treadmill, the more easy and comfortable for using. So please read this manual carefully before use new machine.

To guarantee the maximum quality of products, all parts of this treadmill use high quality material, and passed strict inspection and

testing. Refer to this manual, will guide you assemble, use and maintain this machine correctly.

Thanks for using !

2. Safety Instructions

We considered many safety problems when design and manufacture this treadmill, to ensure your safety, please read all contents of this manual carefully before use. We do not bear the consequences of any abnormal operation.

⚠ RISK

Do not use the heart rate device together with other wireless heart rate devices, or it can cause electrical interference.

⚠ WARNING

Please follow the instructions below to avoid any hurt to you or others.

1. To avoid any accidents or danger, please make sure this treadmill is fully grounded before using.

2. While running, please clamp the safety lock(red) to an appropriate position of your clothes. If any unsuspected situation happened, it'll dropped off immediately to stop the machine

3. a. Please refer to your health care doctor's opinion before exercising.

b. Please wear comfortable sportswear when exercising, don't wear shoes with soft sole,or shoe shavings will be involved into motor and control system, and cause operating malfunction

c. Keep the room clean and tidy, avoid dirts being absorbed into the treadmill, which will cause operating malfunction.

d. User weight should not exceed 100kg.

4. This product is for one person use only when it is running. To avoid any accidents, please do not let children or pets play around to avoid accidents.

5. Minimum spacing requirements for placing the treadmill in the home, no less than 100cm respectively for front and both sides, no less than 200cm for rear.

6. Please do not use this treadmill if power line broken.

7. If the treadmill is damaged or broken, please do not use and contact for warranty.

8. Please do not touch any moving parts when the treadmill is running, never press or stuff any objects into the treadmill.

9. This machine is suitable for indoor use, please do not use outdoors or in the gym.

10. Place the treadmill on clean and smooth floor, keep it in good ventilation condition, ensure the unit ventilated. Make sure there are no sharp objects nearby. Do not use it near water or fire sources.

11. Please use the handrail when getting on or getting off from the machine. Do not get off from the treadmill when the walking machine is not stopped completely.If need an emergency jump, you must pull off the safety lock,then the treadmill will stop immediately.

12. Do not use this machine when you are using oxygen equipment or or using spray near it.

13. To make sure the treadmill running properly, please do not install any accessories which are not supplied by the original factory.

14. Must keep all parts of the treadmill installed firmly.

15. Please turn off and unplug the power after using the treadmill.

Number	Spare parts		Single function	Multifunction
1	Frame	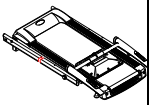	■	■
2	Manual		■	■
3	Side Cover		■	■
4	Screws Pack	Sixth page	■	■
5	Message Hang	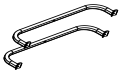		■
6	Message Bracket	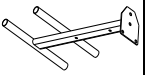		■
7	Message Helnet			■

8	Feet Tube Foam	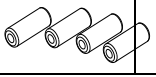		■

3. Packing Specifications

Screw pack

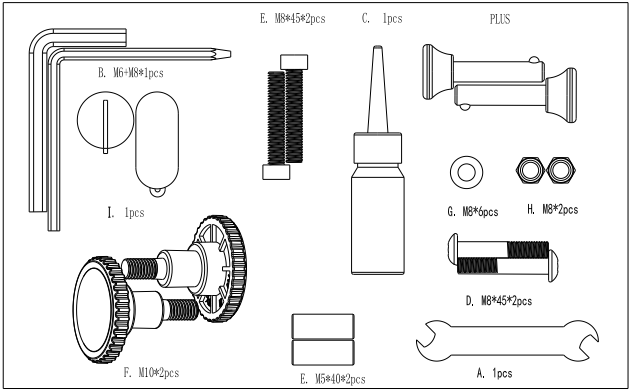

4. Assembly Instructions

Step 1. Pull up the upright in the direction of the arrow as shown below and secure it with M8*45 screws and M8 bushings.

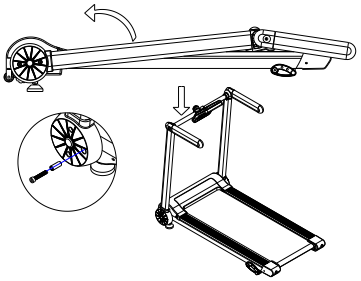

Step 2. Rotate the handrail in the direction indicated by the arrow and fix it with the M10 knob;

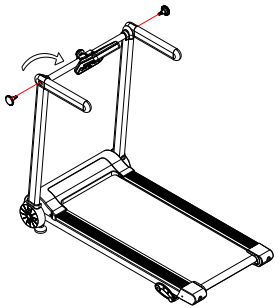

Step 3. Rotate the meter in the direction of the arrow until you feel the best angle. Finally, use the knob on the back to secure it and put a safety lock to use your treadmill.

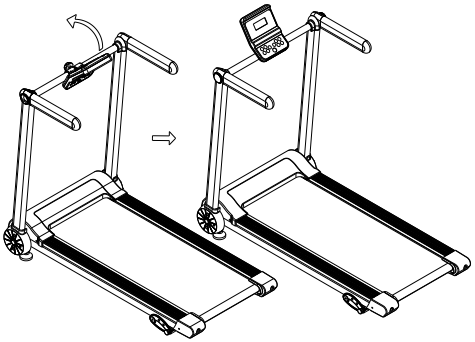

Step 4. Installation of multi-function accessories

1. The 5# massage bracket is fixed on the column with F# screw M8*15 and G# flat pad M8, and then fixed with D# massage stand with G# screw M8*45, I# flat pad M8 and H# anti-loose nut M8 On the 6# massage stand.

2. Respectively, put the 8# sponge jacket on the round tube of the 6# massage stand.

3. Fix the 7# massage head on the flat plate at the upper end of the 6# massage stand with its own screws, flat pad and elastic pad.

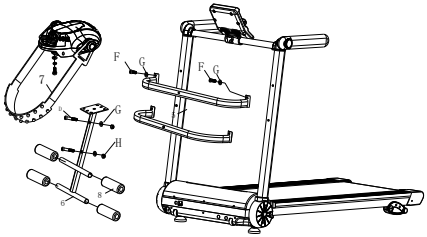

5. Electric Control Instruction

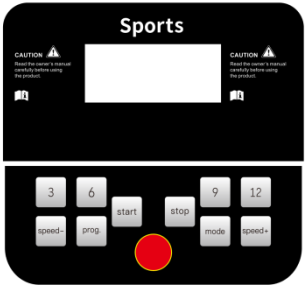

Boot start: Normal start after 3 seconds countdown.

The number of programs is P1~P12 automatic programs.

Safety lock function

Unplugging the safety lock immediately shows that the "SAFE" treadmill is quickly stopped, When the safety lock is placed, the electronic watch is fully displayed for 2 seconds, and the data is all

cleared.

Key Function

Start button, stop button:

“START” is the start button. When the treadmill is stopped, press the start button, the speed displays “1.0”, and the treadmill starts.

“STOP” is the stop button. When the treadmill is running, press the stop button, all data is cleared, the treadmill stops .

Program key:

"PROGAM" is the program key. In the standby state, press this button to cycle through the manual mode to the automatic program P1 – P12; the manual mode is the system default operation mode, the default speed of the manual mode is 1.0km/h, and the maximum running speed is 12.8km/h.

Mode key:

“MODE” is the mode button. In the standby mode, press this button to cycle through three different countdown modes of operation from time, distance and calories. when selecting various modes, the speed increase/decrease key can be used to set the relevant countdown value. When you are done, press the “START” button to start the treadmill.

Speed button:

“SPEED+” and “SPEED -” are speed addition and subtraction keys: they can be used to adjust the speed after the treadmill is started, stepping 0.1Km/time, “SPEED+” and “SPEED -” can be used to parameterize the treadmill. To adjust the set value.

Indication Function

Speed display

Displays the speed value of the current run.

Time display

Shows the running time in manual mode or the running time countdown in mode and program.

Distance display

Displays the distance total in manual and program mode or the inverse of the mode running distance.

Calorie display

Shows the calorie accumulation during exercise in manual and program mode or the calorie count in mode run.

The range of data displayed by each window:

TIME：0:00 – 99:59(MIN)

DISTANCE: 0.00 – 99(KM)

CALORIES: 0.0 – 990 (KC)

SPEED:1 – 12.8KM/H

Automatic program

The default running time is 10 minutes. After the program is selected, the running time is set. The program segment of each program is divided into 10 segments, and the running time of each program block is evenly distributed. The motor stops the meter clear after the running time is completed. The following is a motion chart of 12 programs.

Time slot Program		Set time / 10 = run time of each time slot									
		1	2	3	4	5	6	7	8	9	10
P1	SPEED	2	3	1	4	3	2	1	3	3	1
P2	SPEED	3	4	5	6	5	4	3	4	4	2
P3	SPEED	2	3	4	5	4	3	4	3	4	2
P4	SPEED	3	4	5	6	5	7	5	4	3	3
P5	SPEED	3	5	7	6	5	8	5	4	3	2

P6	SPEED	4	6	8	10	12	8	9	6	4	2
P7	SPEED	5	6	7	5	6	8	6	5	4	2
P8	SPEED	5	6	5	4	3	2	3	5	4	2
P9	SPEED	5	6	5	4	2	2	3	5	4	2
P10	SPEED	2	5	7	5	8	6	5	2	4	3
P11	SPEED	2	5	6	7	8	9	10	5	3	2
P12	SPEED	2	3	5	6	8	6	9	6	5	3

Parameter setting in 3 modes

The countdown time setting is initially 30:00 minutes, the setting range is 5:00---90:00 minutes, and the step is 1:00.

The calorie setting of the calorie count is: 100 kcal, the setting range is 20---990 kcal, step 10.

The initial distance of the countdown distance is 5.0 km, the setting range is 0.5---99.0 km, and the step is 0.1

The cycle switching sequence is: manual, time, distance, calories.

other

When a countdown parameter is run, the display shows END, and a

0.5 second alarm every 2 seconds until the treadmill stops,

stops the alarm, and then returns to the manual mode state.

Countdown time, countdown calorie, and countdown distance can only be set to one of them. Run the last setting, the set parameters

※If the treadmill you purchased is equipped with Bluetooth music function, please operate it as follows after power on:

Turn on the treadmill power switch, manually search for the Bluetooth device (JF-BTMP3) with the mobile phone, find the Bluetooth device to click and connect. After the connection is successful, the music on the mobile phone can be transmitted to the power amplifier device on the treadmill through Bluetooth, Control the prev, next, volume, and other control sounds on the phone

6. Maintenance Instructions

Proper maintenance keeps your treadmill in top condition; incorrect maintenance can hurt or shorten the life of your treadmill.

WARNING:Always unplug the treadmill's power cord before cleaning or maintaining the product!

1. Regularly remove dust to keep the parts clean,

2. After using the treadmill, wipe the instrument and other parts of the sweat and debris with a clean towel or cloth. Be careful not to

splash water on the electrical components and under the running belt.

3. Place your treadmill in a clean, dry environment, make sure the power is off, and unplug it.

4. In order to facilitate the movement, the treadmill is equipped with wheels installed. Please confirm that the power is disconnected and the body is folded before moving.

5. Always check and lock all parts of the treadmill; parts of the damaged ring must be replaced immediately.

6. In order to better maintain and extend the life of the treadmill, it is recommended that you rest the treadmill for 10 minutes after 30 minutes of continuous use.

7. The running belt has been adjusted at the factory, but after use, the running belt will be stretched, will deviate from the center position and cause the running belt friction strip and the rear cover to be damaged. It is normal for the running belt to be stretched during use. After using it for a period of time, if you are running with a treadmill and it is slippery or not smooth, you can adjust the tightness of the running belt to improve.

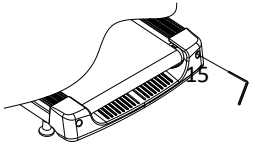

A. Running belt tightening adjustment If the running belt is too loose, please insert the supplied hex wrench into the adjusting hole of the left footstep of the treadmill, turn it 1/4 turn clockwise, and then adjust the right foot to rotate clockwise. 1/4 laps, note that the left and right must be adjusted synchronously, so that the running belt can be tightened and the running belt will not deviate from the center point. If the running belt is too tight, the left and right synchronization will be adjusted counterclockwise.

Note: The running belt cannot be adjusted too tightly. This will break the running belt, increase the pressure of the front/rear drum, cause damage to the roller bearing, etc., abnormal noise or other problems, and only need to adjust to the running belt without slipping.

B. Running belt alignment adjustment

When you use the treadmill, the pressure on the two belts is not the same when running, and the pressure on the running belt is unbalanced, causing the running belt to deviate from the center. This deviation is normal and it automatically returns to the center when no one is running on the running belt. If you don't get back to the

center, you need to run back to the center.

Run the treadmill at no load, adjust the speed to the sixth gear, and observe the distance from the running belt to the left and right side bars:

● If it is to the left, use a hex wrench to turn the left screw 1/4 turn clockwise;

● If it is biased to the right, use a hex wrench to turn the right screw 1/4 turn clockwise;

● If the running belt is still not in the middle, repeat the above action until it is adjusted to the middle.

After adjusting the running belt to the middle, adjust the speed to the sixth gear, and observe the deviation of the running belt and the smooth running condition. If there is any deviation, repeat the adjustment step.

Caveat! Do not overtighten the rollers! This will result in permanent damage to the bearing!

8. lubricating oil

The treadmill is lubricated at the factory, but the treadmill's lubricity is often checked to help keep the treadmill in optimal use. The treadmill must be lubricated after one year of use or 100 hours

of operation.

After 30 hours or 30 days of use, when the treadmill is at rest, pull up the running belt from the side and reach the surface of the running platform as far as possible. If you feel the lubricant, you do not need to add lubricating oil; if you touch the surface There is a strong feeling of dryness, please follow the instructions below to refuel. (Please use non-oil-based lubricants)

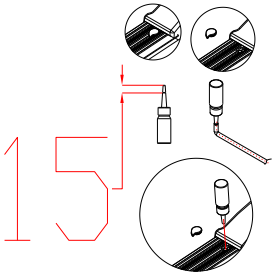

How to add lubricant, please operate as shown below, open the sidebar left

For the fueling decorative cover on the front side, use a pair of scissors or a utility knife to cut the oil bottle according to the size of the figure, and then add the oil according to the bottom icon. When filling, please pay attention to insert the thin rod at the front end of the oil bottle into the fuel filler pipe on the platform. Go in.

7. Failures And Trouble Shooting

1. Electronic watch displays error message code and

excludes

Fault code	Fault description Troubleshooting	Fault process

E1	Abnormal communication: The communication between the lower control and the electronic watch is abnormal after power-on.	The lower control stops and enters the fault state. Can not run up. The electronic watch displays the fault code and the buzzer sounds 3 times. Possible reason: The communication between the electronic control and the electronic watch is blocked. Check each connection of the electronic watch to the lower control communication line to ensure that each core is fully inserted. Check if the cable between the electronic watch and the controller is damaged and replace the cable.

E2	Indicates that the controller does not detect the voltage on the motor.	Possible reason: Check if the motor cable is connected and reconnect the motor cable. Check the motor cable for damage, odor, and replace the motor.

E3	No speed sensor signal: The voltage output is controlled to the DC motor, and the motor speed feedback is not received continuously for more than 3 seconds.	1. Check that the motor cable is securely connected to the port 2. When the machine enters the fault state, the electronic watch buzzer sounds 9 times, and the fault code is displayed at the same time. The rest of the area does not display the content. After the fault condition is maintained for about 10 seconds, it enters the standby state and can be restarted. Possible reason: The speed sensor signal is not detected for 3 seconds, check if the sensor plug is plugged in or damaged, plug it in or replace the sensor. 3. When the machine enters the fault state, the electronic watch buzzer sounds 9 times, and the fault code is displayed at the same time. The rest of the area does not display the content. If it returns to normal after the shutdown, it can enter the standby state and start normally.

E5	Overcurrent protection: In the running state, the lower control continuously detects that the DC motor current is greater than the rated current for more than 3 seconds.	When the machine enters the fault state, the electronic watch buzzer sounds 9 times, and the fault code is displayed at the same time. The rest of the area does not display the content. After the fault condition is maintained for about 10 seconds, it enters the standby state and can be restarted. Possible reason: Exceeding the rated load, the current is too large, the system is self-protected, or a part of the treadmill is stuck, resulting in the motor not turning, the load is too heavy, the current is too large, the system is self-protected; adjust the treadmill again. Start up and run. There is also checking whether the motor is running excessively or has a burnt smell, replacing the motor; or checking whether the controller burns the smell, replacing the controller; or checking whether the power supply voltage specification is inconsistent or low, and using the correct one. The voltage specification is retested.

E6	Explosion-proof protection: The drive motor circuit is damaged due to abnormal power supply voltage or abnormal motor.	Possible reason: Check if the power supply voltage is lower than 50% of the normal voltage. Please retest with the correct voltage specification; check the controller for odor, replace the controller; check if the motor cable is connected and reconnect the motor cable.
E7	Indicates that the electronic watch does not detect the safety lock signal.	The magnetron is damaged, the magnetron is installed in the correct position, and the magnet is placed.

2. Common problems and troubleshooting methods

1. Some or all of the buttons are not working well

1.1 Uncover the upper case of the electronic watch and test whether the buttons are working ;

1.2 Check or replace the electronic board ;

1.3 Check the button can be worked after the power is turned back on .

2. The electronic watch has no display

Troubleshooting methods :

2.1Check if the input voltage is within the allowable range : AC 200-240V ;

2.2 Check if the switch on the electric running machine is turned on. ;

2.3 Check if the fuse inside the power outlet is blown. If it is blown, replace it with a spare fuse ;

2.4Check the controller, if LED is lit ;

2.5Check each cable ;

2.6Check or replace the electronic board ;

2.7Check or replace control board.

3. Other problems and troubleshooting

a. The treadmill cannot start

Check if the power plug is plugged in, the power switch is turned on, and the safety switch is removed.

b.Treadmill slips

Adjust the running belt tightly by referring to the instructions.

c.Running belt deviation

Refer to the instructions to adjust the running belt to center.

d.Running abnormal sound

Check if the machine screws are loose and the running belt needs to be lubricated.

8. Warranty Terms

Warranty coverage

In the case of proper use and maintenance, the non-human damage caused by normal use, the warranty card is limited to the original purchaser and may not be transferred.

2. Free warranty period

Free one year warranty from the date of purchase. Consumables, normal wear and tear are not covered by the warranty, such as running belts and other accessories.

3. The following terms are not covered by the warranty

a.Damage caused by abuse, negligent use, accident or unauthorized modification;

b. Damage caused by improper adjustment of the running belt and the driving belt;

c. Damage caused by improper maintenance;

d. Some other illegal operations and the resulting damage.

4. Spare parts and services

Please contact the dealer or us.

Our company is not responsible for the extended services arranged by the merchants themselves.

5. The warranty commitment is only valid for private use of the family, not for professional training in the gym. If you need to purchase non-warranty accessories, please contact customer service. Please provide the following information when ordering:

●Instruction

●Treadmill model

●Part number or picture

● Proof of purchase date

9. Exercise Guidelines

● Consult your doctor before starting a exercise or training program. Please follow the doctor's advice and instructions for training.

● Set your goals with your doctor before you can ensure that the plan is realistic and start the training program with ease.

● You can add some aerobic exercise to your exercise plan, such as walking, jogging, swimming, dancing or cycling. Always check the pulse. If you do not have an electronic heartbeat monitor, ask your doctor how to measure the pulse by hand or neck. In addition, you must set the target heart rate based on age and physical well-being.

● Drink plenty of water during exercise. You must replenish moisture lost from excessive exercise to prevent dehydration. Avoid drinking plenty of ice water or beverages, drinking water or beverages at room temperature.

10. Warm Exercise

Warm up and soothe exercise:

A successful exercise program must include warm-up, aerobic and soothing exercise. The number of exercises will be at least two or three times a week, and one day after the exercise, you can increase the number of exercises to four to five days after a few

months. Warm-up is an important part of your fitness. Warm up before each exercise. Warm warm-up can prepare your body for more intense exercise, because warm-up can help muscles warm and stretch. Improves blood circulation, increases pulse, and delivers more oxygen into the muscles. After the aerobic exercise, repeated warm-up exercises can also reduce muscle soreness. We recommend the following warm-up and soothing exercises.

1. Stretch down: The knees are slightly curved, the body slowly bends forward, let the back and shoulders relax, and the hands touch the toes as much as possible. Hold for 10-15 seconds and then relax. Repeat 3 times	Pic 1

2. Tendon stretch: Sit on a clean cushion, straighten one leg, and then put the other leg inward so that it fits snugly against the inside of the straight leg and try to touch the toe with your hand. Hold for 10-15 seconds and then relax. Repeat 3 times for each leg	 Pic 2
3.Calf and heel stretch: Hold the wall with both hands or stand with one foot behind, keep the hind legs upright, and the heels touch the ground and tilt toward the wall. Hold for 10-15 seconds and then relax. Repeat 3 times for each leg	 Pic 3

4. Quadriceps stretching: Grasp the balance with your left hand or the table, then extend your right hand backwards and grab the right heel and slowly pull it toward your hips until you feel the muscles in front of your thighs. Hold for 10-15 seconds and then relax. Repeat 3 times for each leg	 Pic 4
5. The sartorius muscle (muscle inside the thigh) stretches: The soles of the feet are opposite, the knees are seated outwards, and both hands grasp the feet and pull toward the groin. Hold for 10-15 seconds and then relax. Repeat 3 times	 Pic 5